TURN ON

- Turn on computer
- Start up software (v6.12r1)
- Open workspace
- Turn on controller
- Select ‘Scan Triple’
- Turn on light for optical microscope
- Put on gloves

ALIGN

- Tip in holder
- Test sample in AFM
- Check sample height then insert holder and screw down
- Flick switch to LFM
- Align laser onto cantilever
- Align laser spot on the photodiode
- Readjust laser spot on cantilever to maximise SUM, realign photodiode to zero both displays

CHECK SOFTWARE

- Check details - See over page

TUNE

- Flick switch to ‘tmAFM’
- Click tuning fork in software
- Check tune limits (cantilever dependent) then ‘Auto tune’
- Exit and check top display on AFM reads 1 - 2 V

COARSE APPROACH

- Remove tip holder
- Replace sample
- Check sample height then insert holder and screw down
- Focus optical microscope on cantilever
- Focus optical microscope on surface below tip
- ‘Tip down’ until cantilever starts to come into focus

ENGAGE

- Check upper display is still at 1-2 V, and lower at 0 V
- Click ‘engage’
- Watch optical microscope, upper display (jump to engage not drift), and ‘z motor’
- If false engage, readjust upper display

SCAN

- Bring back to surface (decrease setpoint, increase force)
- Optimise gains
- Scan as necessary
- Periodically check z piezo position and ‘free’ amplitude
- Adjust z limit and amplitude limit if necessary
- when finished click ‘retract’ 3 times
- for new sample go back to ‘Coarse Approach’

TURN OFF

- Remove tip holder
- Remove sample
- Flick switch to ‘STM’
- Turn off controller
- Turn off optical microscope
- Close lid
- Close software
- Turn off computer
- **Fill in log book**
- **Leave area clean and tidy**

Tapping Mode

Neil Wilson

December 2007

ALIGN

- Tip in holder
- Test sample in AFM
- Check sample height then insert holder and screw down
- Flick switch to LFM
- Align laser onto cantilever
- Align laser spot on the photodiode
- Readjust laser spot on cantilever to maximise SUM, realign photodiode to zero both displays

1. Align laser onto cantilever

2. Adjust mirror to maximise SUM (v.carefully)

3. Centre laser spot on photodiode by zeroing top and bottom displays

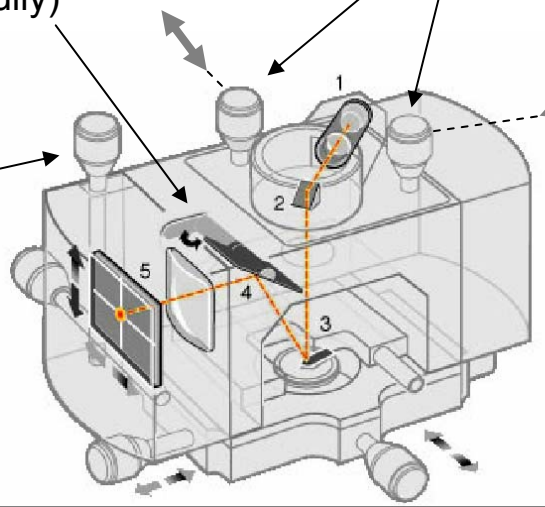

Labels:
1. Laser
2. Mirror
3. Cantilever
4. Tilt mirror
5. Photodetector

CHECK SOFTWARE

- Select ‘Scan Triple’
- Microscope mode ‘Tapping”
- Check details ‘Scan size etc, …. See over page
- Channel 1 - Height, Ch. 2 amplitude, Ch. 3 ‘Phase’

Check these

Scan	
Scan size	1.00 µm
X offset	0.000 nm
Y offset	0.000 nm
Scan angle	0.00 º
Scan rate	1.97 Hz
Tip velocity	3.95 µm/s
Samples/line	512
Lines	256
Channel 1	
Data type	Height
Data scale	10.000 nm
Line direction	Retrace
Realtime planefit	Line
Channel 2	
Data type	Amplitude
Data scale	0.1000 V
Line direction	Retrace
Realtime planefit	Line
Channel 3	
Data type	Phase
Data scale	10.00 º
Line direction	Retrace
Realtime planefit	Offset

Feedback	
Integral gain	0.2000
Proportional gain	0.3000
Amplitude setpoint	1.400 V
Drive frequency	90.0000 kHz
Drive phase	0 º
Drive amplitude	100.0 mV
Other	
Microscope mode	Tapping
Z limit	5.086 um
Amplitude limit	2.000 V
TM Deflection limit	20.00 V
Phase limit	360.0 º
Units	Metric

Check these

Autotune sets these

Check these