PROBE	PH MASDVT1000S6 BL1.3 X/H NO_I/E	BRUKER NMR Probe Department
Part No./ Serial No.	H144137-0002	
KA Order No.	6288007	
Ext. Order No.	409154/200 – University Warwick	
Date	26.11.2020	

Schematic

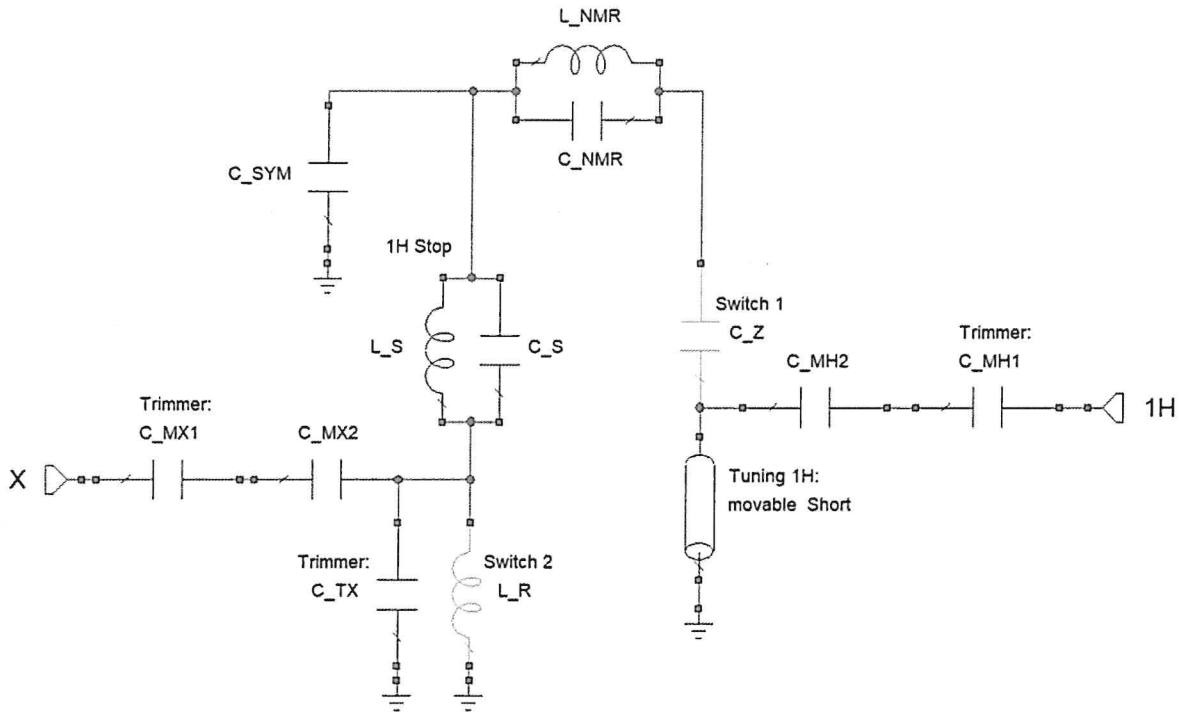

Table of Values

	Value	Part No.	Comment
L_{NMR}	~ 37 pF	HZ15601	NMR Coil
C_{Sym}	0.1 pF		Symmetry Capacitor
C_Z	2.2 pF		Zeiger-C
TL		H178265	Transmission Line
C_S	2.2 pF		Stop Circuit Capacitor
L_S	~ 11.5 nH		Stop Circuit Inductor
L_R	~ 10 nH		Range Coil
C_{MH1}	1.0 – 5.0 pF	85812	^{1}H Matching Capacitor 1
C_{MH2}	1.2 pF		^{1}H Matching Capacitor 2
C_{TX}	1.0 – 25 pF	H165575	X Tuning Capacitor
C_{MX1}	0.4 – 4.8 pF	Z74185	X Matching Capacitor 1

Measured values (Low Range)

Nucleus	**1H**	**15N**
X_L / MHz	< 990	86
X_H / MHz	> 1010	246
ΔF / MHz	13.1	3.0
Q	138	49.3
Isolation from/ dB		
1H	--	- 39.0
15N	- 36.0	--

Measured values (Mid Range)

Nucleus	**1H**	**13C**
X_L / MHz	< 990	249
X_H / MHz	> 1010	354
ΔF / MHz	8.5	7.5
Q	137	70
Isolation from/ dB		
1H	--	- 35.0
13C	- 35.0	--

Measured values (High Range)

Nucleus	**1H**	**31P**
X_L / MHz	< 990	249
X_H / MHz	> 1010	575
ΔF / MHz	9.5	4.4
Q	142	88
Isolation from/ dB		
1H	--	- 59.0
31P	- 43.0	--