Research Report

HISTORY MATTERS: The Preview Benefit in Search Is Not Onset Capture

Melina A. Kunar, Glyn W. Humphreys, and Kelly J. Smith

Behavioural Brain Sciences Centre, The University of Birmingham, Birmingham, England, United Kingdom

Abstract—*Visual search for a conjunction target is made easier when distractor items are temporally segregated over time to produce two separate old and new groups (the new group containing the target item). The benefit of presenting half the distractors first is known as the preview effect. Recently, some researchers have argued that the preview effect occurs because new stimuli capture attention. This account was tested in the present study by using a novel "top-up" condition that exploits the fact that when previews appear only briefly before the search display, there is minimal preview benefit. We show that effects of a brief preview can be "topped up" by an earlier exposure of the same items, even when the preview disappears between its first and second presentations. This top-up effect demonstrates that the history of the old stimuli is important for the preview benefit, contrary to the account favoring onset capture. We discuss alternative accounts of how the preview benefit arises.*

When observers search for a target defined by a conjunction of color and form, performance is typically linearly related to the number of distractors present, with slopes on the search functions on the order of 25 to 30 ms/item (Treisman & Gelade, 1980). Such linear functions have been interpreted in terms of a serial process, with attention allocated sequentially to each item until the target is found (Treisman, 1999; though see Duncan & Humphreys, 1989; Humphreys & Müller, 1993; and Townsend, 1972, for alternative views). However, if the distractors in these displays are presented in separate temporal intervals, search becomes much easier, even if the final display is the same as in the standard conjunction condition. Watson and Humphreys (1997) had participants search for a blue *H* among green *H* and blue *A* distractors. In a preview condition, they presented the green *H* distractors for 750 ms or longer, and then added the blue letters (the distractors and the target, when present) to the displays. Search slopes in the preview condition were about half those in the standard conjunction condition, and did not differ from the slopes found when only the blue letters were presented. Thus, under this preview condition, observers seem to attend only to the new letters, and the old distractors no longer have an impact on search.

Various accounts have been proposed to explain why the preview effect occurs, but these may be broadly divided into (a) those that emphasize the importance of the new items and (b) those that emphasize the importance of the representational status of the old items. An example of the first kind of account is provided by Donk and Theeuwes (2001). They proposed that the preview effect results from attentional capture by the new items (specifically, by the new onsets in the search displays). It has been well documented that new stimuli can be prioritized for selection if they onset abruptly, showing a luminance increment (e.g., Müller & Rabbitt, 1989; Yantis & Jonides, 1984). It is possible that onset capture by the new items minimizes effects of the old preview items on search. Donk and Theeuwes reported results consistent with this idea: They failed to find a preview benefit when the new items were isoluminant with the background, and so were not formed by new onsets.

Alternative proposals come from Watson and Humphreys (1997) and from Jiang, Marks, and Chun (in press). Watson and Humphreys argued that the preview benefit depends in part on the inhibitory filtering of old distractors, a process they termed visual marking. They originally suggested that inhibition was applied to the locations of the old stimuli, reducing their impact on search when the new items were presented at previously unoccupied positions. In addition, inhibition may be applied across the old items on the basis of some common property, such as their color (when the old and new items differ in color), so enabling the old items to be filtered as a group. Color filtering in conjunction search has been well documented (e.g., see Kaptein, Theeuwes, & van der Heijden, 1995). In preview search, color-based filtering may be particularly effective when the stimuli move (see Olivers, Watson, & Humphreys, 1999; Watson & Humphreys, 1998). A grouping account has also been put forward by Jiang et al. (in press). They argued that the temporal separation between the onsets of the new and old items is used to segment the two sets of distractors, facilitating search. It is also possible that temporal grouping is used along with other forms of grouping (e.g., by common color or common motion; see Olivers et al., 1999; Watson, 2001) to augment the inhibitory filtering of distractors in search.

The main contrast between these last two accounts, which focus on inhibitory filtering and grouping, and the former, onset-capture account is whether the history of the old items should matter for preview search. According to an onset-capture account, the history of the old items would not be important in producing a preview effect. We sought to test this account using a novel "top-up" procedure. This procedure exploits two properties of the preview effect: (a) the relatively long preview period needed to elicit the effect and (b) the fact that the preview benefit is abolished when the old items undergo a transient offset before appearing again with the new stimuli.

Take the first point. Watson and Humphreys (1997) demonstrated that the preview benefit takes a relatively long time to become established. Search is more efficient if the old items are presented for around 400 ms or more, prior to the new stimuli, than if the old items appear for a shorter time (in which case the old stimuli influence search). The long preview period needed to generate a benefit can be accounted for by each of the accounts we have mentioned. For an onset-capture account, a short preview may not be sufficient to temporally segment the onsets of the old and new items (though see Yantis & Gibson, 1994, who suggested that there remains a 90% probability of onset capture when stimuli are separated by 100 ms). For an inhibitory-marking account, a short preview may not be sufficient to enable old

Address correspondence to Melina Kunar, Behavioural Brain Sciences Centre, The University of Birmingham, Edgbaston, Birmingham, B15 2TT, England; e-mail: mak608@bham.ac.uk.

items to be suppressed. For a grouping account, a short preview may not be sufficient to establish stable grouping of the old items, for segmentation from the new. Whichever account is proposed, though, the data show that the advantage is limited when there is a short interval between the old and new items. This places one constraint on the preview benefit.

Now take the second point. Watson and Humphreys (1997) found that the preview advantage was completely abolished if, after appearing for 750 ms, the preview stimuli disappeared for 250 ms before appearing again with the new items. The effect of the offset can be accommodated by the onset-capture account if 250 ms is sufficient to allow the old previewed objects to be classed as new items when they reonset. Essentially, once there is this interval between the preview and the search display, all the items in the search display are treated as new, common objects, and all compete for selection as in the standard conjunction baseline.

In the top-up condition, we used a short-duration preview (150 ms), which remained on the screen when the new items were presented. Given the previous results, confirmed in a baseline condition in the present study, there should be a minimal preview benefit under this circumstance. However, in addition, we presented the preview earlier (for 450 ms), but then had it offset for 250 ms before the short-duration (150-ms) preview appeared. With a 250-ms offset, the preview should be treated as a new stimulus when it reappears (cf. Watson & Humphreys, 1997). Consequently, according to a new-onset-capture account, performance in the top-up condition should be similar to that when the short-duration (150-ms) preview is presented alone: There should be a minimal preview benefit. However, if the history of the preview is important, then any benefit from the short-duration preview may be topped up by the earlier presentation of the preview, and a more substantial preview benefit should accrue. We found that this is indeed the case. The evidence indicates that the coding of the old stimuli is important for the preview benefit.

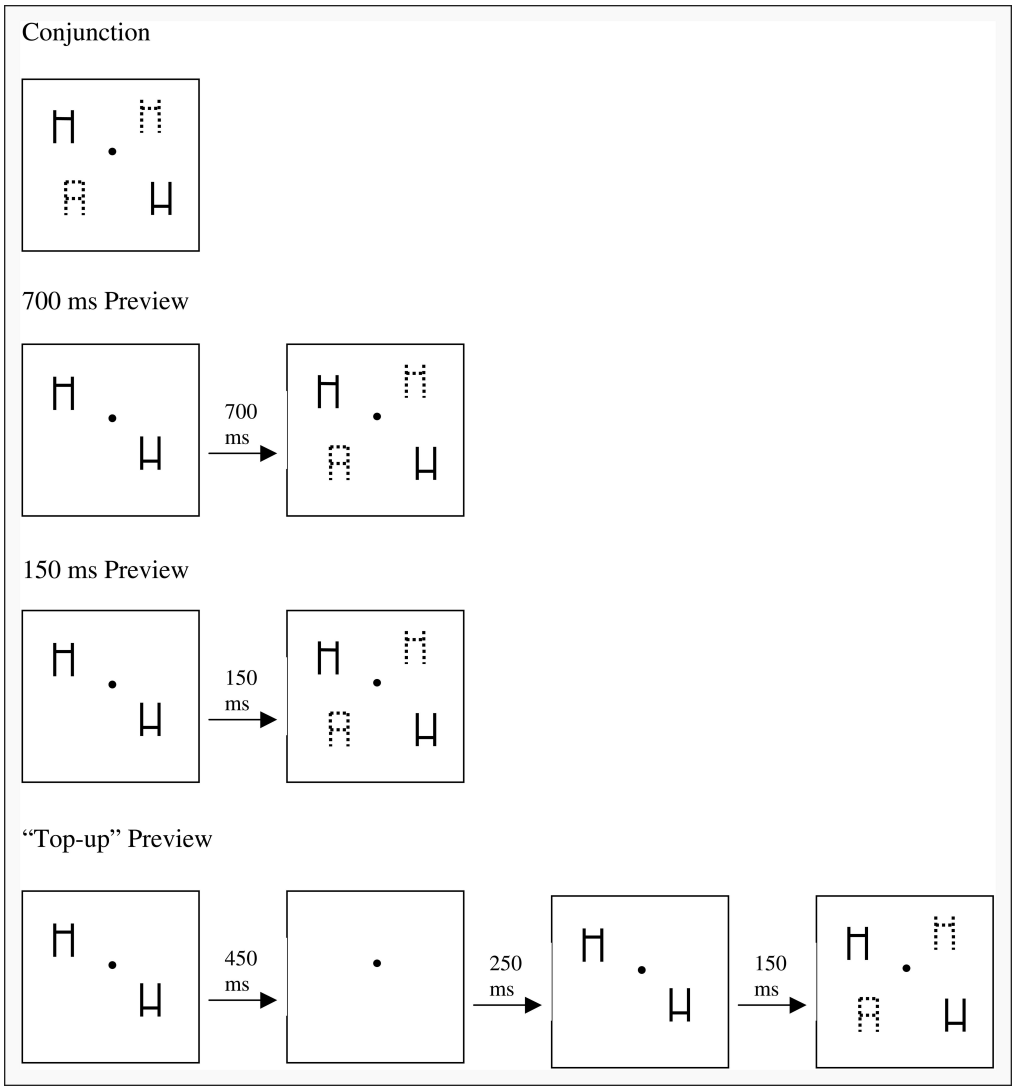

Fig. 1. Example displays for each condition. Letters shown here with dotted lines were blue in the displays the participants viewed, and letters shown with solid lines were green.

METHOD

Participants

Fifteen participants (5 male and 10 female) participated to receive course credits. Their ages ranged from 18 to 28 ($M = 20.5$ years), and they were all taken from a population of undergraduates at the University of Birmingham, Birmingham, England. All participants had normal or corrected-to-normal eyesight.

Stimuli

All stimuli were produced by a Turbo Pascal computer program and run on a Pentium computer with VGA graphics card. The letters, which subtended a visual angle of $0.4° \times 0.8°$ at an observation distance of 60 cm, were randomly positioned within a stimulus field of visual angle $8.5° \times 9.9°$.

The search task involved finding a blue *H* (RGB value: 17, 41, 44) among green *H*s (RGB value: 3, 52, 34) and blue *A*s (RGB value: 17, 41, 44). On each trial, participants had to decide whether the bar of the blue *H* was higher or lower than the midpoint of the vertical sides of the shape. The surrounding green *H* distractors also randomly had bars in positions above the vertical midpoint or below it, in order to preserve conjunction conditions, by making the distractor *H*s similar to the target *H*.[1] The target was present on every trial.

In all conditions, there were 4, 8, or 16 items in total in each search display. We included a conjunction baseline condition to provide a measure of search efficiency if all the items were competing for selection. If the old items could not be ignored in the preview conditions, then the slopes of the serial functions in these conditions would match the slope found in the baseline condition.

Design and Procedure

Each participant was tested in four conditions (see Fig. 1): (a) a conjunction baseline condition (blue and green letters were presented simultaneously); (b) a standard preview condition (green letters appeared for 700 ms and then remained when the new blue letters appeared); (c) a 150-ms preview condition (green letters appeared for 150 ms and then remained when the blue letters were added); and (d) a novel, top-up preview condition (green letters appeared for 450 ms, offset for 250 ms, and then appeared for 150 ms before the new blue letters were added). Each search condition was presented in a separate block. The experimental blocks each contained 60 trials (20 per display size). The order of the blocks was counterbalanced, and participants were given a practice session before each condition. The experiment lasted approximately 30 min in total.

At the beginning of each trial, a fixation dot appeared in the screen for 1,000 ms, followed by either the preview or the full search display (in the conjunction baseline). Participants were asked to keep their eyes on the fixation dot until the second set of stimuli was presented and then respond to the blue *H* by pressing either an "m" or a "z," to indicate whether the bar was high or low. Response keys were counterbalanced across the experiment.

1. Pilot studies using this target-discrimination task have produced the same pattern of results as those found in Watson and Humphreys's (1997) original study, in which a present/absent task was used. This task is a more efficient way of generating data, as twice as many target-present responses can be collected in the same period of time.

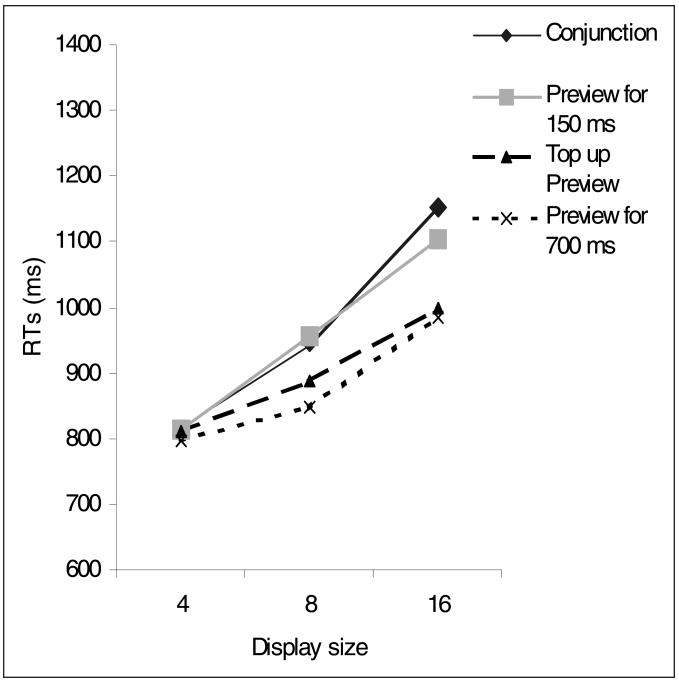

Fig. 2. Mean correct response times (RTs) as a function of display size for the conjunction and preview conditions.

RESULTS

One subject was dropped from analysis because of high error rates (more than 25% in some conditions). Figure 2 shows the mean correct response times (RTs) as a function of display size for each condition. Error rates are shown in Table 1.

RTs

RTs for correct trials only for each of the four conditions were entered into a two-way within-participants analysis of variance (ANOVA) with condition and display size as the main factors. Both main effects were significant, $F(3, 39) = 5.02$, $p < .01$, for condition and $F(2, 26) = 57.93$, $p < .01$, for display size. There was also a significant interaction of condition and display size, $F(6, 78) = 3.64$, $p < .01$.

Two-factor repeated measures ANOVAs were conducted (so comparisons across conditions could be made), with condition and display size as the main factors. Table 2 shows a summary of the statistics. Search was more efficient in both the 700-ms preview condition

Table 1. *Percentage of errors*

	Display size		
Condition	4	8	16
Conjunction	2.1	1.8	7.1
700-ms preview	3.6	2.9	8.6
150-ms preview	5.0	5.0	7.1
Top-up preview	5.0	4.3	9.3

Table 2. *Summary of statistics comparing conditions*

Comparison	Main effect of condition		Main effect of display size		Condition × Display Size interaction	
	F	*p*	*F*	*p*	*F*	*p*
700-ms preview vs. baseline	10.29	<.01	61.08	<.01	4.27	<.05
150-ms preview vs. baseline	0.19	n.s.	59.05	<.01	1.09	n.s.
Top-up preview vs. baseline	9.01	<.01	55.87	<.01	11.83	<.01
150-ms preview vs. 700-ms preview	3.99	n.s.	37.49	<.01	3.76	<.05
150-ms preview vs. top-up preview	7.15	<.05	28.13	<.01	3.58	<.05
700-ms preview vs. top-up preview	0.56	n.s.	26.40	<.01	0.33	n.s.

(search slope = 15.83 ms/item) and the top-up preview condition (search slope = 15.53 ms/item) than in the conjunction baseline condition (search slope = 27.64 ms/item). However, the efficiency of search with a 150-ms preview (search slope = 23.43 ms/item) did not differ from that found in the conjunction baseline condition. The 700-ms and top-up preview conditions were also more efficient in search than the 150-ms preview condition. There was no reliable difference in search efficiency between the 700-ms preview condition and the top-up preview condition.

Errors

Error rates for each condition were entered into a two-way repeated measures ANOVA, with condition and display size as the main factors. There was a significant effect of display size, $F(2, 26) = 20.26$, $p < .01$, but not of condition, $F(3, 39) = 2.03$, n.s.; neither was there a significant Condition × Display Size interaction, $F(6, 78) = 0.56$, n.s.

DISCUSSION

The results are clear. The data from the short-duration preview condition support the findings reported by Watson and Humphreys (1997): There was minimal benefit relative to the conjunction baseline. What is interesting, then, is that a substantial preview benefit occurred in the top-up condition. The benefit from a short-duration (150-ms) preview was incremented by the earlier presentation of the preview, even though the preview had then offset for 250 ms before its reappearance. This offset has previously been found to abolish the preview benefit (Watson & Humphreys, 1997). The earlier presentation of the preview should have had no influence on the status of the blue search stimuli as new onsets, yet the top-up from the first preview was sufficient to generate an advantage.

We suggest that these results can be explained only if the coding of the old items contributes to the effect. This explanation runs counter to the onset-capture account of the results as offered by Donk and Theeuwes (2001). The results are also difficult to explain in terms of an elaborated form of this account, which holds that the top-up display may reduce attention capture by items that reappear at their earlier locations. According to this view, the green items in the search displays influence performance less under top-up conditions than under the baseline condition because their onsets are made less salient by the earlier preview. However, remember that a 250-ms offset of preview displays is quite sufficient to completely abolish the preview benefit when the old items reappear in the same locations as before, but the new items appear too (Watson & Humphreys, 1997; we have replicated this result on at least two other occasions). If the preview effect in our top-up condition was due to reduced attentional capture by the old items, then a similar preview benefit should have been found when the old items offset and reonset along with the new items.

If new-onset capture is insufficient to explain the preview benefit, what other accounts are viable? As noted in the introduction, Watson and Humphreys (1997) proposed that the benefit arises in part from inhibitory filtering of the old items, which then reduces the competition for selection from these old stimuli when the new items appear. According to this account, the top-up procedure may enable an initial representation of the old items to be encoded and inhibited. This representation may be available for some time after the old items offset, and it may be reengaged when the old items reappear on their own. When old items reappear, it takes either less time to encode them or less time to inhibit them than with the standard short-duration preview, so the preview is more effective. The grouping account of the preview effect is similar, but emphasizes that the top-up enables the items in the short-duration preview to be grouped more easily, and so segmented from the new items in search.

For both accounts, though, it is necessary to assume that the representation of the old items survives an offset, to top-up the short duration. Why, then, is the preview benefit abolished when the old items offset and then reappear with the new (Watson & Humphreys, 1997)? This result suggests that any benefit from the preview is lost if it groups or shares a critical property with the new stimuli, such as a common onset. For example, inhibition of old items may enable attention to be prioritized to the new onsets. However, when the new onsets include the former preview items as well as the new search items, then attention to the former preview stimuli may compete with any inhibition, and override it under some circumstances.

Acknowledgments—This work was supported by a Biotechnology and Biological Sciences Research Council studentship to M.A.K. and by a Medical Research Council grant to G.W.H.

REFERENCES

Donk, M., & Theeuwes, J. (2001). Visual marking beside the mark: Prioritizing selection by abrupt onsets. *Perception & Psychophysics*, *93*, 891–900.

Duncan, J., & Humphreys, G.W. (1989). Visual search and stimulus similarity. *Psychological Review*, *96*, 433–458.

Humphreys, G.W., & Müller, H.J. (1993). Search via recursive rejection (SERR): A connectionist model of visual search. *Cognitive Psychology*, *25*, 43–110.

Jiang, Y., Marks, L.E., & Chun, M.M. (in press). Visual marking: Selective attention to asynchronous temporal groups. *Journal of Experimental Psychology: Human Perception and Performance*.

Kaptein, N.A., Theeuwes, J., & van der Heijden, A.H.C. (1995). Search for a conjunctively defined target can be selectively limited to a color-defined subset of elements. *Journal of Experimental Psychology: Human Perception and Performance*, *21*, 1053–1069.

Müller, H.J., & Rabbitt, P.M.A. (1989). Reflexive and voluntary orienting of visual attention: Time course of activation and resistance to interruption. *Journal of Experimental Psychology: Human Perception and Performance*, *15*, 315–330.

Olivers, C.N.L., Watson, D.G., & Humphreys, G.W. (1999). Visual marking of locations and feature maps: Evidence from within-dimension defined conjunctions. *The Quarterly Journal of Experimental Psychology*, *52A*, 679–715.

Townsend, J.T. (1972). Some results on the identifiability of parallel and serial processes. *British Journal of Mathematical and Statistical Psychology*, *25*, 168–199.

Treisman, A. (1999). Feature binding, attention and object perception. In G.W. Humphreys, J. Duncan, & A. Treisman (Eds.), *Attention, space and action* (pp. 91–112). Oxford, England: Royal Society Press.

Treisman, A., & Gelade, G. (1980). A feature-integration theory of attention. *Cognitive Psychology*, *12*, 97–136.

Watson, D.G. (2001). Visual marking in moving displays: Feature-based inhibition is not necessary. *Perception & Psychophysics*, *63*, 74–84.

Watson, D.G., & Humphreys, G.W. (1997). Visual marking: Prioritizing selection for new objects by top-down attentional inhibition of old objects. *Psychological Review*, *104*, 90–122.

Watson, D.G., & Humphreys, G.W. (1998). Visual marking of moving objects: A role for top-down feature based inhibition in selection. *Journal of Experimental Psychology: Human Perception and Performance*, *3*, 1–17.

Yantis, S., & Gibson, B. (1994). Object continuity in apparent motion and attention. *Canadian Journal of Experimental Psychology*, *48*, 182–204.

Yantis, S., & Jonides, J. (1984). Abrupt visual onsets and selective attention: Evidence from visual search. *Journal of Experimental Psychology: Human Perception and Performance*, *10*, 601–621.

(RECEIVED 10/24/01; REVISION ACCEPTED 2/26/02)