Last-Mile Logistics

Dr Arne Strauss

Associate Professor of Operational Research

University of Warwick

International Conference on Operations Research, 6-8 Sept 2017, Berlin, Germany

wbs

WARWICK
THE UNIVERSITY OF WARWICK

Last-Mile Cost Challenge

TOP 3 CONSUMER WANTS

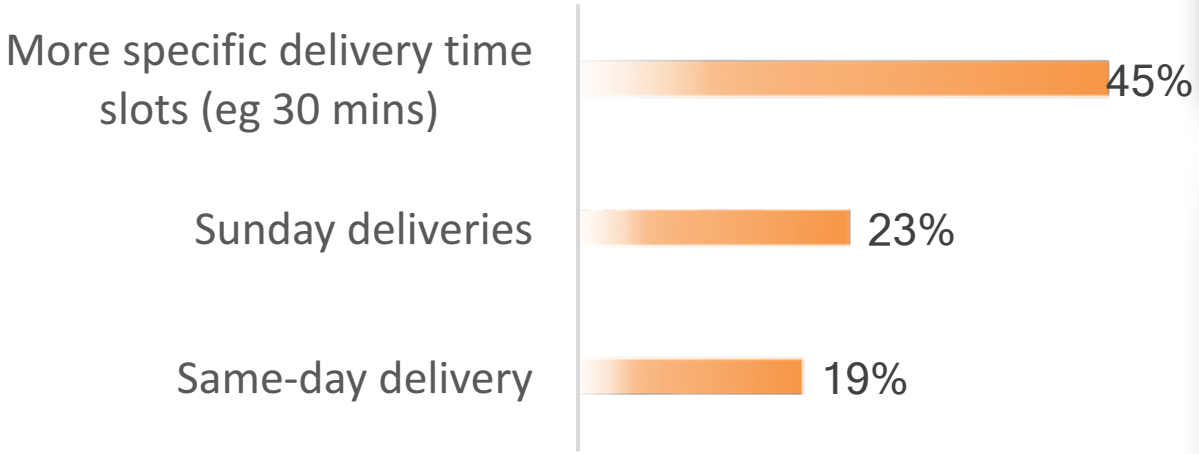

Mintel E-Commerce UK 2014

Comment: Retailers need to offer delivery choice to keep customers happy

RetailWeek
LATEST RETAIL NEWS, JOBS, ANALYSIS AND MARKET DATA

19 September, 2012 | By Patrick Gallagher

Tesco takes on Amazon with same-day delivery across UK

24 July 2017 BBC

The Connected Business

Delivery charges cost online retailers dear

NOVEMBER 18, 2015

MarketWatch

Amazon earnings fail to deliver because of delivery costs

Published: Jan 29, 2016

Agenda

1. Methodological innovations
2. Technological innovations
3. Business model innovations

Methodological Innovations

Order booking | Order processing | Order delivery

Demand Management

Same-Day Routing

Demand Management – Problem Outline

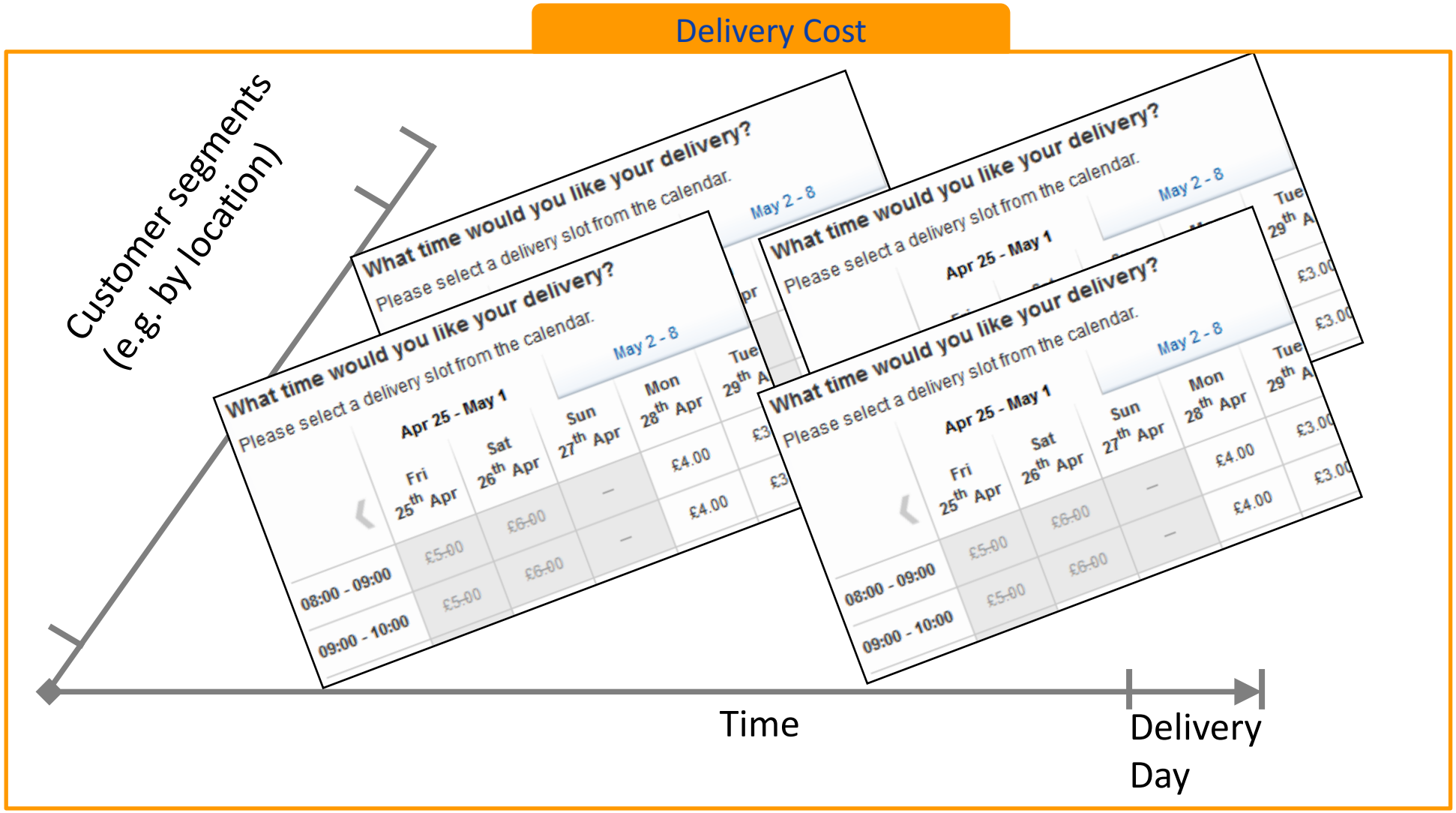

wbs

WARWICK
THE UNIVERSITY OF WARWICK

Optimal Control & Vehicle Routing Problem

$$V_t(\boldsymbol{x}_t) = \max_{\boldsymbol{d} \in \boldsymbol{D}} \sum_{j \in J} \lambda P_j(\boldsymbol{d}) \left[r + d_j - \left(V_{t+1}(\boldsymbol{x}_t) - V_{t+1}\left(\boldsymbol{x}_t + \mathbf{1}_j\right) \right) \right] + V_{t+1}(\boldsymbol{x}_t) \;\; \forall \boldsymbol{x}_t, t$$

$$V_{T+1}(\boldsymbol{x}_T) = -C(\boldsymbol{x}_T) \; \forall \boldsymbol{x}_T$$

- Stage t: small time period
- State $\boldsymbol{x}_t$: accepted orders until time period t
- Decision $\boldsymbol{d}$: delivery charges, discounts and/or other incentives, or slot availability
- J: Set of delivery time slots
- λ: customer arrival rate
- $P_j(\boldsymbol{d})$: Probability of customer selecting delivery time slot j
- r: order profit before delivery cost

Optimal Control & Vehicle Routing Problem

Opportunity cost

$$V_t(\boldsymbol{x}_t) = \max_{\boldsymbol{d} \in \boldsymbol{D}} \sum_{j \in J} \lambda P_j(\boldsymbol{d}) \left[r + d_j - \left(V_{t+1}(\boldsymbol{x}_t) - V_{t+1}(\boldsymbol{x}_t + \mathbf{1}_j) \right) \right] + V_{t+1}(\boldsymbol{x}_t) \;\; \forall \boldsymbol{x}_t, t$$

$$V_{T+1}(\boldsymbol{x}_T) = -C(\boldsymbol{x}_T) \; \forall \boldsymbol{x}_T$$

- Stage t: small time period
- State $\boldsymbol{x}_t$: accepted orders until time period t
- Decision $\boldsymbol{d}$: delivery charges, discounts and/or other incentives, or slot availability
- J: Set of delivery time slots
- λ: customer arrival rate
- $P_j(\boldsymbol{d})$: Probability of customer selecting delivery time slot j
- r: order profit before delivery cost

Optimal Control & Vehicle Routing Problem

$$V_t(\boldsymbol{x}_t) = \max_{\boldsymbol{d} \in \boldsymbol{D}} \sum_{j \in J} \lambda P_j(\boldsymbol{d}) \left[r + d_j - \left(V_{t+1}(\boldsymbol{x}_t) - V_{t+1}\left(\boldsymbol{x}_t + \mathbf{1}_j\right) \right) \right] + V_{t+1}(\boldsymbol{x}_t) \;\; \forall \boldsymbol{x}_t, t$$

$$V_{T+1}(\boldsymbol{x}_T) = -C(\boldsymbol{x}_T) \; \forall \boldsymbol{x}_T$$

Delivery cost: Vehicle routing problem with time windows

- Stage t: small time period
- State $\boldsymbol{x}_t$: accepted orders until time period t
- Decision $\boldsymbol{d}$: delivery charges, discounts and/or other incentives, or slot availability
- J: Set of delivery time slots
- λ: customer arrival rate
- $P_j(\boldsymbol{d})$: Probability of customer selecting delivery time slot j
- r: order profit before delivery cost

Optimal Control & Vehicle Routing Problem

$$V_t(\boldsymbol{x}_t) = \max_{\boldsymbol{d}\in\boldsymbol{D}} \sum_{j\in J} \lambda P_j(\boldsymbol{d}) \left[r + d_j - \left(V_{t+1}(\boldsymbol{x}_t) - V_{t+1}\left(\boldsymbol{x}_t + \mathbf{1}_j\right)\right)\right] + V_{t+1}(\boldsymbol{x}_t) \quad \forall \boldsymbol{x}_t, t$$

$$V_{T+1}(\boldsymbol{x}_T) = -C(\boldsymbol{x}_T) \; \forall \boldsymbol{x}_T$$

Curse of dimensionality

- Stage t: small time period
- State $\boldsymbol{x}_t$: accepted orders until time period t
- Decision $\boldsymbol{d}$: delivery charges, discounts and/or other incentives, or slot availability
- J: Set of delivery time slots
- λ: customer arrival rate
- $P_j(\boldsymbol{d})$: Probability of customer selecting delivery time slot j
- r: order profit before delivery cost

Optimal Control & Vehicle Routing Problem

Non-linear (choice-based) price optimization

$$V_t(\boldsymbol{x}_t) = \max_{\boldsymbol{d}\in\boldsymbol{D}} \sum_{j\in J} \lambda P_j(\boldsymbol{d}) \left[r + d_j - \left(V_{t+1}(\boldsymbol{x}_t) - V_{t+1}\left(\boldsymbol{x}_t + \mathbf{1}_j\right)\right)\right] + V_{t+1}(\boldsymbol{x}_t) \;\; \forall \boldsymbol{x}_t, t$$

$$V_{T+1}(\boldsymbol{x}_T) = -C(\boldsymbol{x}_T)\; \forall \boldsymbol{x}_T$$

- Stage t: small time period
- State $\boldsymbol{x}_t$: accepted orders until time period t
- Decision $\boldsymbol{d}$: delivery charges, discounts and/or other incentives, or slot availability
- J: Set of delivery time slots
- λ: customer arrival rate
- $P_j(\boldsymbol{d})$: Probability of customer selecting delivery time slot j
- r: order profit before delivery cost

Typical Solution Approach

$$V_t(\boldsymbol{x}_t) = \max_{\boldsymbol{d} \in \boldsymbol{D}} \sum_{j \in J} \lambda P_j(\boldsymbol{d}) \left[r + d_j - \left(V_{t+1}(\boldsymbol{x}_t) - V_{t+1}\left(\boldsymbol{x}_t + \mathbf{1}_j\right) \right) \right] + V_{t+1}(\boldsymbol{x}_t) \;\; \forall \boldsymbol{x}_t, t$$

$$V_{T+1}(\boldsymbol{x}_T) = -C(\boldsymbol{x}_T) \; \forall \boldsymbol{x}_T$$

Offline

$V_{\mathrm{t}}(\mathbf{x}) \approx \hat{V}_t(\boldsymbol{x})$

Opportunity cost estimates →

Online

Control policy

Typical Solution Approach

$$V_t(\boldsymbol{x}_t) = \max_{\boldsymbol{d} \in \boldsymbol{D}} \sum_{j \in J} \lambda P_j(\boldsymbol{d}) \left[r + d_j - \left(V_{t+1}(\boldsymbol{x}_t) - V_{t+1}(\boldsymbol{x}_t + \mathbf{1}_j) \right) \right] + V_{t+1}(\boldsymbol{x}_t) \;\; \forall \boldsymbol{x}_t, t$$

$$V_{T+1}(\boldsymbol{x}_T) = -C(\boldsymbol{x}_T) \; \forall \boldsymbol{x}_T$$

Offline

$V_{\mathrm{t}}(\mathbf{x}) \approx \hat{V}_t(\boldsymbol{x})$

Opportunity cost estimates →

Online

Control policy

Online Problem: Choice-Based Pricing Policy

$$\max \sum_{j \in J} P_j(\boldsymbol{d})\left[d_j + r - o_{jt}(\boldsymbol{x}_t)\right]$$

$$\text{s.t.} \quad d \in D$$

Difficulty depends on choice model and feasible region *D*

Notation:

$o_{jt}(\boldsymbol{x}_t)$: *opportunity cost* of accepting order in time slot *j* given previously accepted orders $\boldsymbol{x}_t$ up to time *t*

D: feasible controls

Example 1: Pricing Policy under MNL on Continuous Support

Problem:

$$\max \sum_{j \in J} P_j(\boldsymbol{d}) d_j$$
$$\text{s.t. } \boldsymbol{d} \in \{\boldsymbol{R} \cup \infty\}^{|J|}$$

where

$$P_j(d) = \frac{\exp(\beta_j - \beta_d d_j)}{\sum_{k \in J} \exp(\beta_k - \beta_d d_k) + \exp(\beta_0)}$$

Result:

- 1-1 mapping between price space and sales probability space
- Objective in terms of probabilities is concave
- Obtain optimal prices by standard Newton root search

Source: Dong L, Kouvelis P and Tian Z.
Dynamic Pricing & Inventory Control of Substitute Products.
Manufacturing & Service Operations Management (2009)

Example 2: Pricing under MNL on Finite Price Set

Problem:

$$\max_{S} \sum_{j \in S} P_j(S) d_j$$

$$s.t \quad S \in \left\{ S' \subset J : \sum_{j \in J} a_{ij} 1_{j \in S'} \leq b_i \; \forall i \right\}$$

where $A = [a_{ij}]_{\{i,j\}}$ unimodular,

$$P_j(S) = \frac{v_j}{\sum_{k \in S} v_k + v_0}.$$

Result: Equivalent LP

$$\max_{P} \sum_{j \in J} P_j d_j$$

$$s.t. \quad \sum_{j \in J} P_j + P_0 = 1$$

$$\sum_{j \in J} a_{ij} \frac{P_j}{v_j} - b_i \frac{P_0}{v_0} \leq 0 \qquad \forall i$$

$$0 \leq \frac{P_j}{v_j} \leq P_0 \qquad \forall j$$

Source: Davis J, Gallego G and Topaloglu H. *Assortment Planning under the Multinomial Logit Model with Totally Unimodular Constraint Structures.*
Cornell University, Working Paper (April 2013)

Example 2: Pricing under MNL on Finite Price Set

Problem:

$$\max_{S} \sum_{j \in S} P_j(S) d_j$$

$$s.t \quad S \in \{$$

where A

$$P_j(S) = \frac{v_j}{\sum_{k \in S} v_k + v_0}.$$

Result: Equivalent LP

$$\max_{P} \sum_{j \in J} P_j d_j$$

$$s.t \quad \sum P_i + P_0 = 1$$

$\forall i$

$$0 \le \frac{P_j}{v_j} \le P_0 \qquad \forall j$$

Source: Davis J, Gallego G and Topaloglu H. *Assortment Planning under the Multinomial Logit Model with Totally Unimodular Constraint Structures.* Cornell University, Working Paper (April 2013)

Further info:
Strauss, Klein and Steinhardt.
A Review of Choice-Based Revenue Management: Theory and Models
Working paper, University of Warwick, August 2017

Offline Problem: Opportunity Cost Estimation

Example: Approximate Dynamic Programming Approach

- Decompose delivery area using continuous clustering-first, routing-second approach

- Optimize parameters γ and θ of value function approximation for each area independently:

$$V_{\mathrm{t}}(\mathbf{x}) \approx \hat{V}_t(\boldsymbol{x}) = \gamma_0 - \sum_j \gamma_j x_j + (T + 1 - t)\theta$$

Then, opportunity cost estimates are given by

$$V_{t+1}(\boldsymbol{x}_t) - V_{t+1}\left(\boldsymbol{x}_t + \mathbf{1}_j\right) \approx \gamma_j$$

Source: Yang, X., Strauss, A.K. (**2017**). An approximate dynamic programming approach to attended home delivery management. *European Journal of Operational Research* 263 (2017) 935–945

Current State-of-the-Art: **Order in Advance**

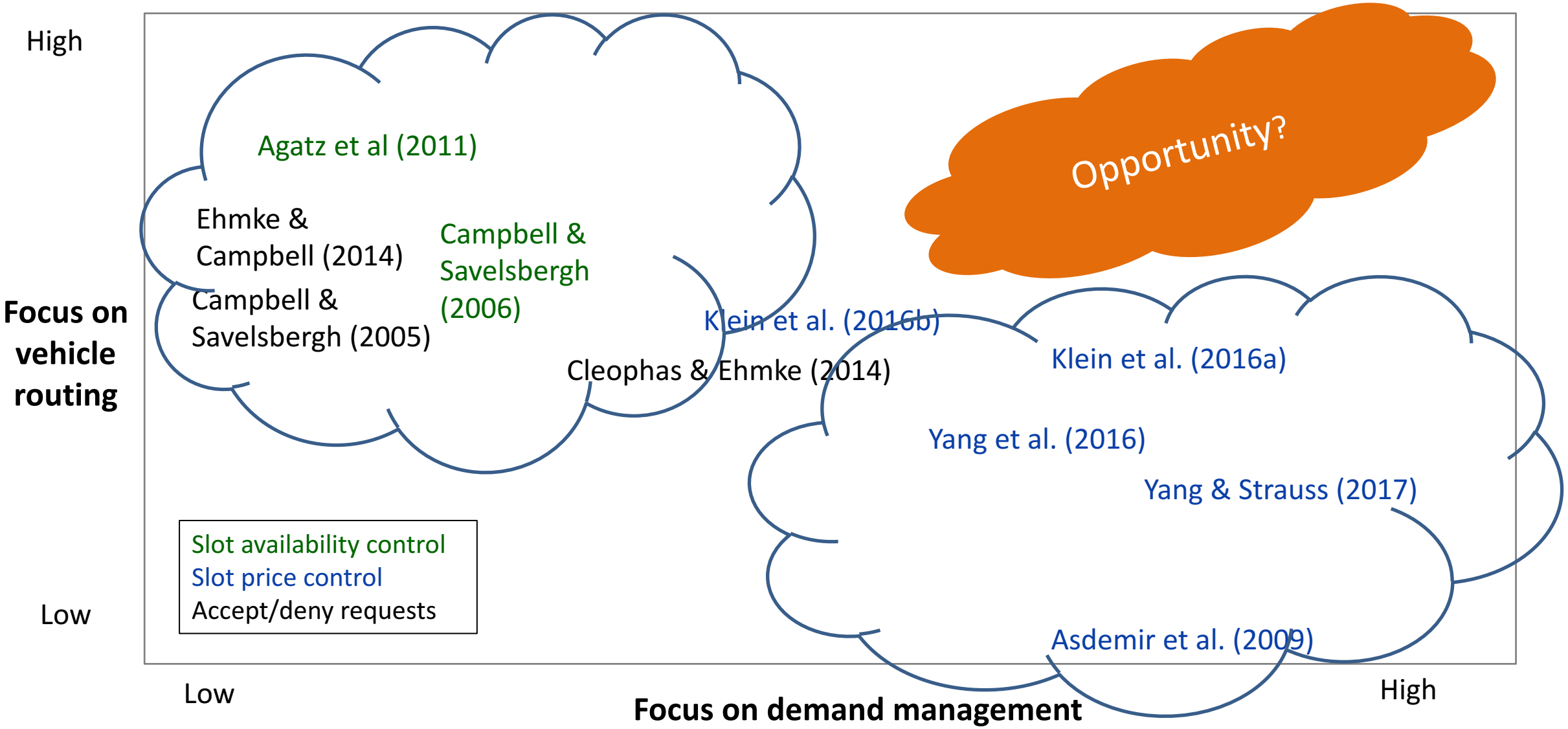

Current State-of-the-Art: **Same-Day**

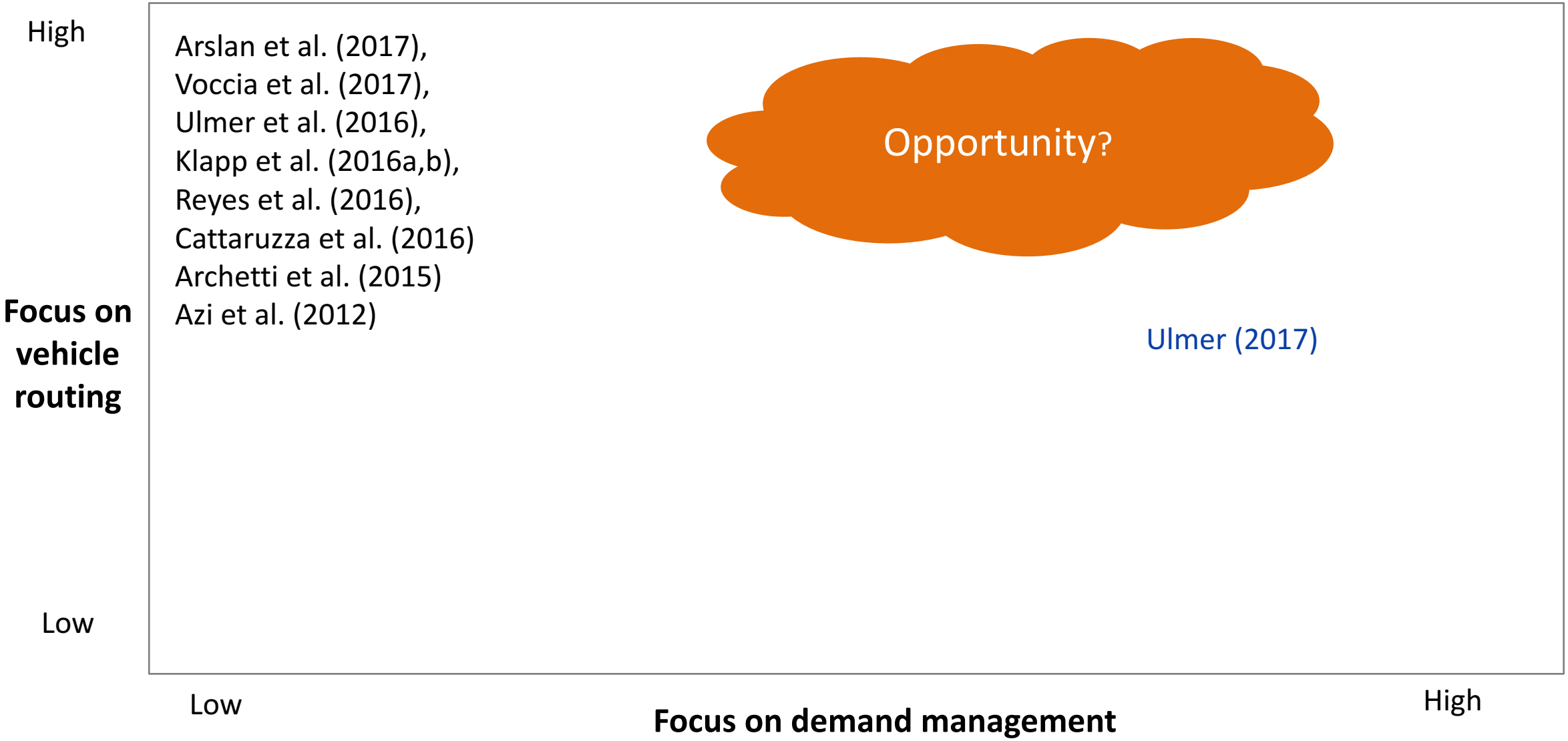

Agenda

1. Methodological innovations
2. Technological innovations
3. Business model innovations

Technological Innovations

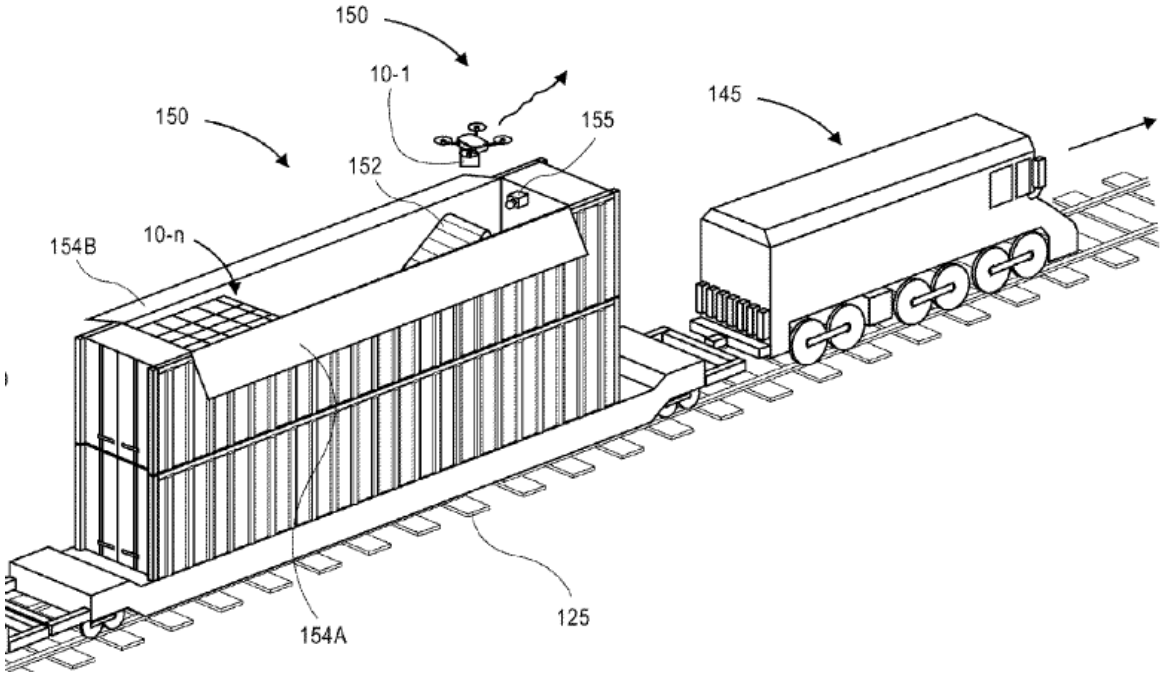

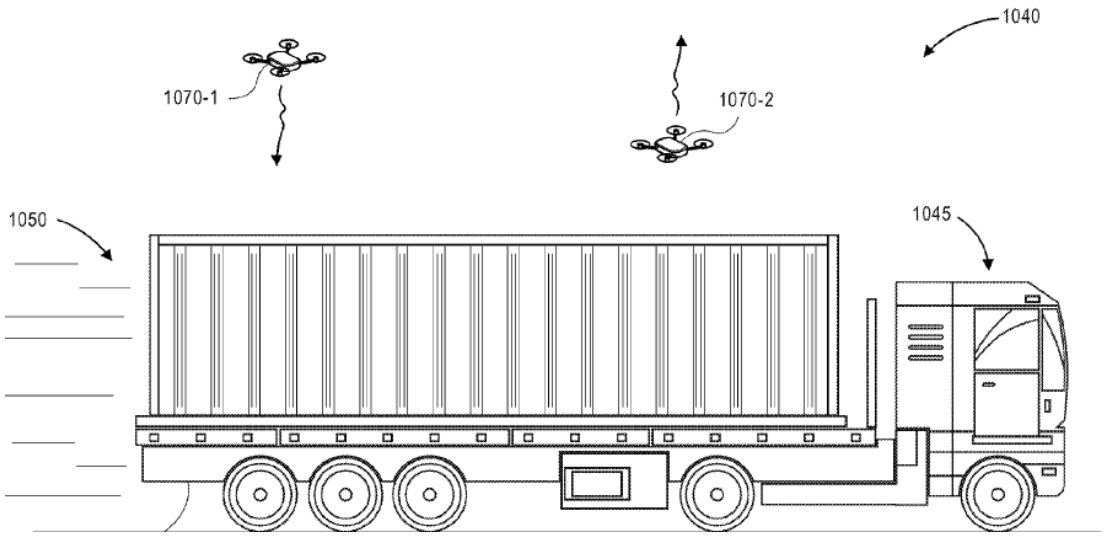

Source: US Patent 9,718564 B1. Aug 1, 2017.

Trucks & Drones

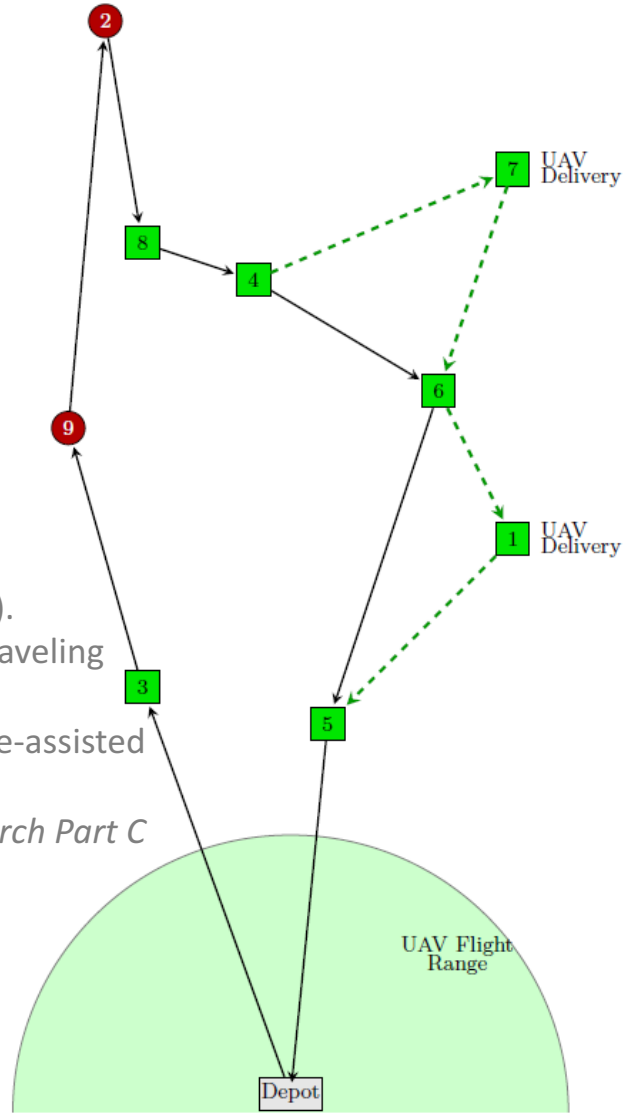

Figure source:
Murray & Chu, (2015).
The Flying Sidekick Traveling Salesman Problem: Optimization of Drone-assisted Parcel Delivery.
Transportation Research Part C

Basic trade-off:

- Speed: drone >> truck
- Capacity & range: drone << truck

Problem designs:

- Single/multiple drones per truck
- Drones departing from truck and/or depots
- Various restrictions on launch, landing and recover locations
- Same-day delivery
- Discrete TSP-based/continuous approximation

Agenda

1. Methodological innovations
2. Technological innovations
3. Business model innovations

Business Model Innovations & Research Opportunities

Flexible (crowdsourced) drivers

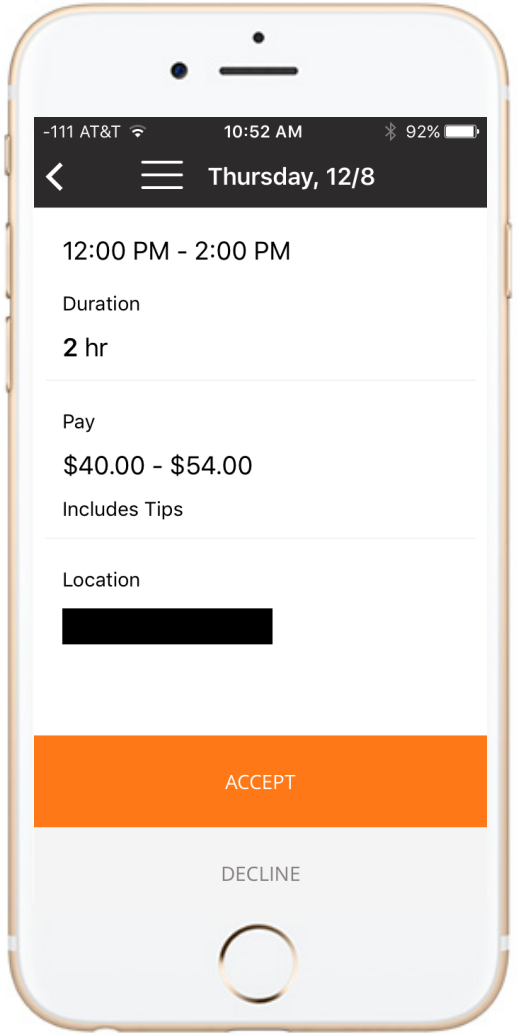

amazon FLEX

UBER RUSH

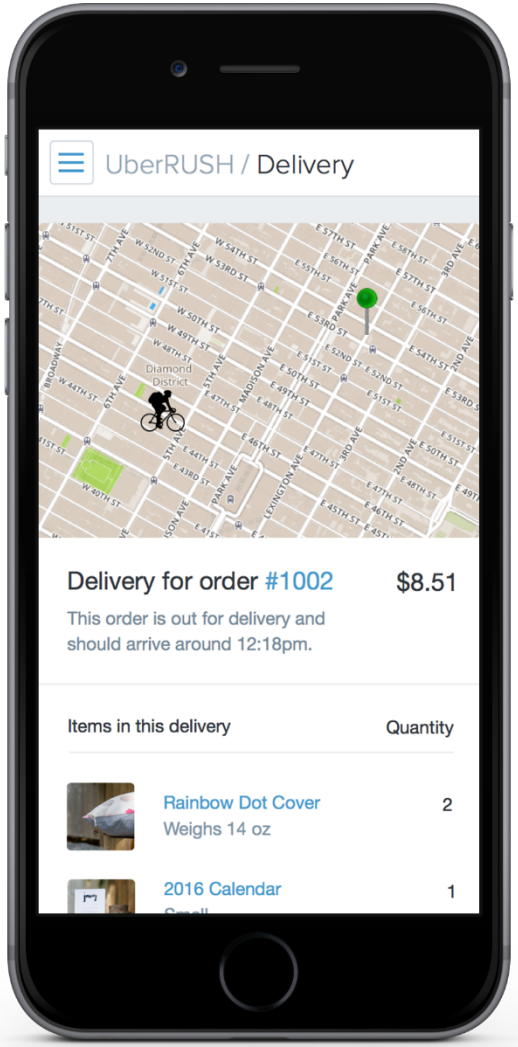

Sharing Economy (Shipping Alliance)

FTC 2050
FREIGHT TRAFFIC CONTROL

TNT THE PEOPLE NETWORK

gnewt

Selected Literature – Demand Management for the Last Mile

- Agatz, N. A. H., Campbell, A. M., Fleischmann, M., & Savelsbergh, M. W. P. (**2011**). Time slot management in attended home delivery. *Transportation Science*, 45(3),435–449.
- Asdemir, K. , Jacob, V. S. , & Krishnan, R. (**2009**). Dynamic pricing of multiple home delivery options. *European Journal of Operational Research, 196* (1), 246–257 .
- Campbell, A. M., & Savelsbergh, M. W. P. (**2005**). Decision support for consumer direct grocery initiatives. *Transportation Science*, 39(3), 313–327.
- Campbell, A. M., & Savelsbergh, M. W. P. (**2006**). Incentive schemes for attended home delivery services. *Transportation Science*, 40(3), 327–341.
- Cleophas, C., & Ehmke, J. F. (**2014**). When are deliveries profitable? Considering or- der value and transport capacity in demand fulfillment for last-mile deliveries in metropolitan areas. *Business and Information Systems Engineering, 6* (3), 153–163.
- Ehmke, J. F., & Campbell, A. M. (**2014**). Customer acceptance mechanisms for home deliveries in metropolitan areas. *European Journal of Operational Research*, 233 (1), 193–207.
- Klein, R. , Mackert, J. , Neugebauer, M. , & Steinhardt, C. (**2016a**). *On the approximation of opportunity cost for dynamic pricing in attended home delivery* . University of Augsburg . Working paper.
- Klein, R. , Neugebauer, M. , Ratkovitch, D. , & Steinhardt, C. (**2016b**). Differentiated time slot pricing under routing considerations in attended home delivery. Forthcoming in *Transportation Science*.
- Yang, X., Strauss, A.K. (**2017**). An approximate dynamic programming approach to attended home delivery management. *European Journal of Operational Research* 263 (2017) 935–945
- Yang, X., Strauss, A. K., Currie, C. S. M., & Eglese, R. (**2016**). Choice-based demand management and vehicle routing in e-fulfillment. *Transportation Science*, 50(2), 473–488.

Selected Literature – Same-Day Deliveries

- Archetti, C, D. Feillet, & M.G. Speranza. (**2015)** Complexity of routing problems with release dates. *European Journal of Operational Research*, 247(3):797–803,.
- Arslan, A, Agatz, N & Zuidwijk, R. (**2017)** Same Day Delivery: Vehicle Routing Problem with Self-Scheduling Drivers. Last Mile Delivery Workshop, Mannheim, Germany, June 22-23 2017
- Azi N, Gendreau M, Potvin JY. **(2012)** A dynamic vehicle routing problem with multiple delivery routes. *Ann. Oper. Res*. 199(1):103–112.
- Cattaruzza, D, Absi, N & Feillet, D. (**2016**) The Multi-Trip Vehicle Routing Problem with Time Windows and Release Dates. *Transportation Science* 50(2), 676 - 693
- Erera, A, Reyes, D. & Savelsbergh, M (**2016**). Complexity of Routing Problems with Release Dates and Deadlines. Working paper, Georgia Tech
- Klapp M, Erera A, Toriello A (**2016a**) The one-dimensional dynamic dispatch waves problem. Forthcoming in *Transportation Sci.*
- Klapp, M. Erera, & Toriello A. (**2016b**). The Dynamic Dispatch Waves Problem for Same-Day Delivery. Working paper, Georgia Tech
- Ulmer, MW (**2017**). Dynamic Pricing for Same-Day Delivery Routing, TU Braunschweig, Germany
- Ulmer MW, Thomas BW, Mattfeld DC (**2016**) Preemptive depot returns for a dynamic same-day delivery problem. Working paper, TU Braunschweig, Germany
- Voccia, S.A., Campbell, A. M. & Thomas, B. (**2017**). The Same-Day Delivery Problem for Online Purchases. Forthcoming in *Transportation Science*

Selected Literature – Truck & Drone

- Agatz, N., P. Bouman, and M. Schmidt (**2016**). Optimization approaches for the traveling salesman problem with drone. Working paper, Erasmus University Rotterdam.
- Ulmer, MW and Thomas, B. (**2017**) Same-Day Delivery with a Heterogeneous Fleet of Drones and Vehicles. Working paper, TU Braunschweig
- Campbell, JF, Sweeney D. and Zhang, J. (**2017**) Strategic Design for Delivery with Trucks and Drones. Working paper, University of Missouri
- Ha, Q.M., Deville, Y., Pham, Q.D. and Hà, M.H. (**2015**) Heuristic methods for the Traveling Salesman Problem with Drone. Technical Report, ICTEAM/INGI/EPL
- Ha, Q.M., Deville, Y., Pham, Q.D. and Hà, M.H. (**2016**) On the Min-cost Traveling Salesman Problem with Drone." Technical Report, ICTEAM/INGI/EPL
- Ferrandez, S.M., Harbison, T., Weber, T., Sturges, R. and Rich, R. (**2016**) Optimization of a truck-drone in tandem delivery network using k-Means and genetic algorithm. *Journal of Industrial Engineering and Management* 9(2), 374-388
- Murray, C. and Chu, A. (**2015**) The Flying Sidekick Traveling Salesman Problem: Optimization of Drone-assisted Parcel Delivery. *Transportation Research Part C* 54:86-109
- Ponza, A. (**2016**) Optimization of Drone-Assisted Parcel Delivery. Universita Degli Studi Di Podova, Italy.
- Wang, X., S. Poikonen, and B. Golden **(2016)** The vehicle routing problem with drones: Several worst-case results. *Optimization Letters*

Selected Literature – Crowdshipping/Shipping Alliances

- Arslan, A, Agatz, N., Kroon, L and Zuidwijk, R (**2016**). Crowdsourced Delivery: A Dynamic Pickup and Delivery Problem with Ad-hoc drivers. Working paper, Erasmus University Rotterdam.
- Arslan, A, Agatz, N & Zuidwijk, R. (**2017)** Same Day Delivery: Vehicle Routing Problem with Self-Scheduling Drivers. Last Mile Delivery Workshop, Mannheim, June 22-23 2017
- Devari et al. (**2017**) Crowdsourcing the last mile delivery of online orders by exploiting the social networks of retail store customers, *Transportation Research Part E* 105 (2017) 105-122
- Kafle, N. Zou, B. & Lin, J. (**2017**) Design and Modeling of A Crowdsource-Enabled System for Urban Parcel Relay and Delivery. *Transportation Research Part B* 99 (2017) 62-82
- McKinnon, A. (**2016**) Crowdshipping: A communal approach to reducing urban traffic levels? Working paper, Kühne Logistics University
- Setzke et al. (**2017**). Matching Drivers and Transportation Requests in Crowdsourced Delivery Systems. Twenty-third Americas Conference on Information Systems, Boston
- Wang, Y. et al. (**2016**) Towards enhancing the last-mile delivery: An effective crowd-tasking model with scalable solutions. *Transportation Research Part E* 93 (2016) 279–293

- Allen et al. (**2016**) Enabling the freight traffic controller for collaborative multi-drop urban logistics: practical and theoretical challenges. Working paper URL: http://www.ftc2050.com/
- Pradenas, L. et al. (**2013**) Mitigation of greenhouse gas emissions in vehicle routing problems with backhauling. *Expert Systems with Applications* 40 (2013) 2985-2991

THANK YOU

Email: arne.strauss@wbs.ac.uk
Web: go.warwick.ac.uk/astrauss/